9-1/2" BENCH TOP DeBourgh Manufacturing Co. 1-800-328-8829

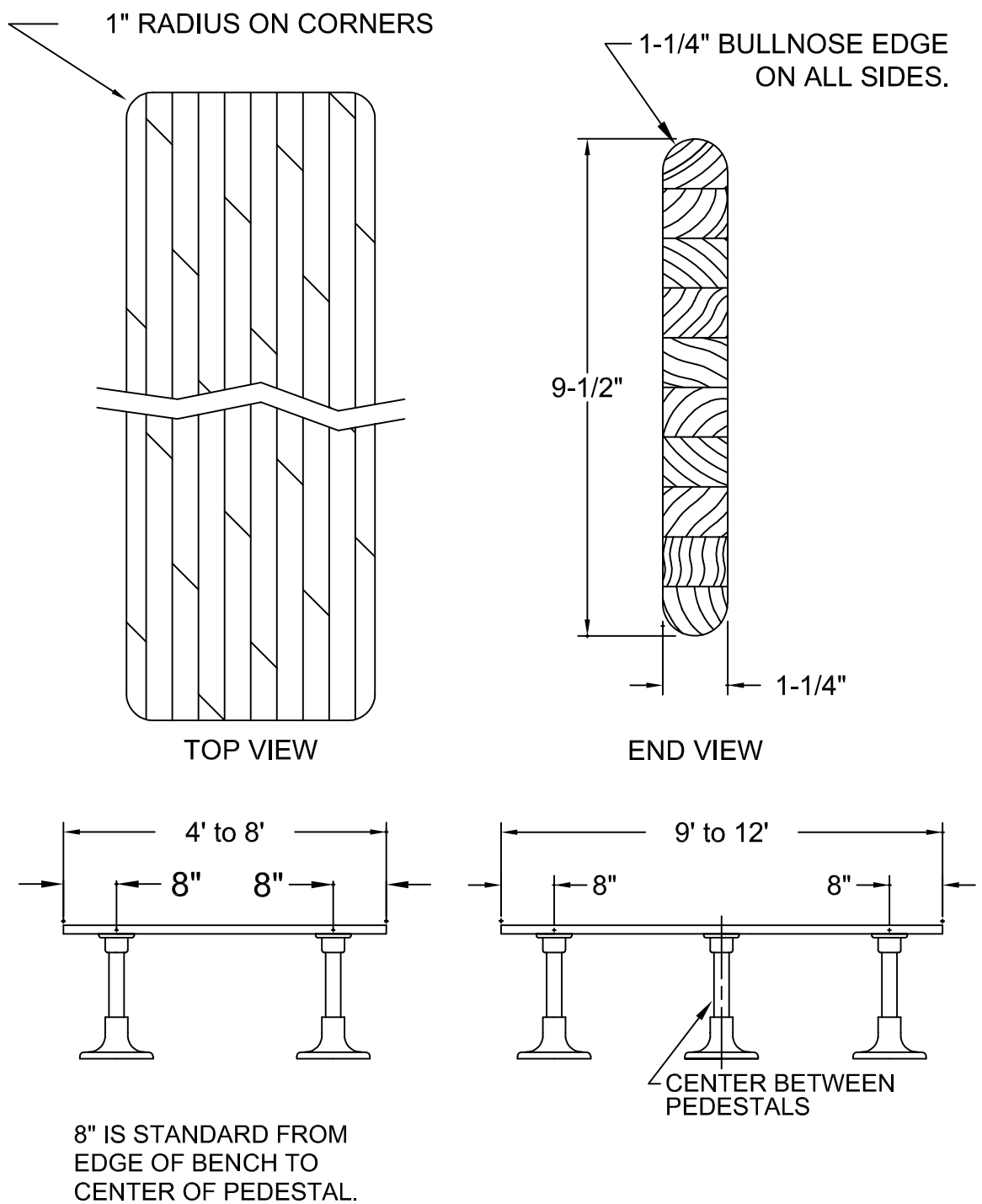

Room No.s	PEDS	Bench Length										
		2'	3'	4'	5'	6'	7'	8'	9'	10'	11'	12'
Total												

Pedestal Color: Ash Gray

Note #1: The benches are constructed of Hardwood strips of various widths.

Note #2: The strips of Hardwood are bonded with a Military Specified Glue.

Note #3: All of the surfaces are sanded and finished with a Lacquer Sealer.

There are two coats of sealer on the top and sides with one coat on the bottom.

Note #4: 12' Length is the maximum offered

Note #5: Installers may need to cut benches to length or to splice together in the field. Bench manufacturer recommends resealing all exposed raw wood surfaces with polyurethane to avoid expansion and swelling caused by water and humidity.